KEP Technologies

The SETLINE line

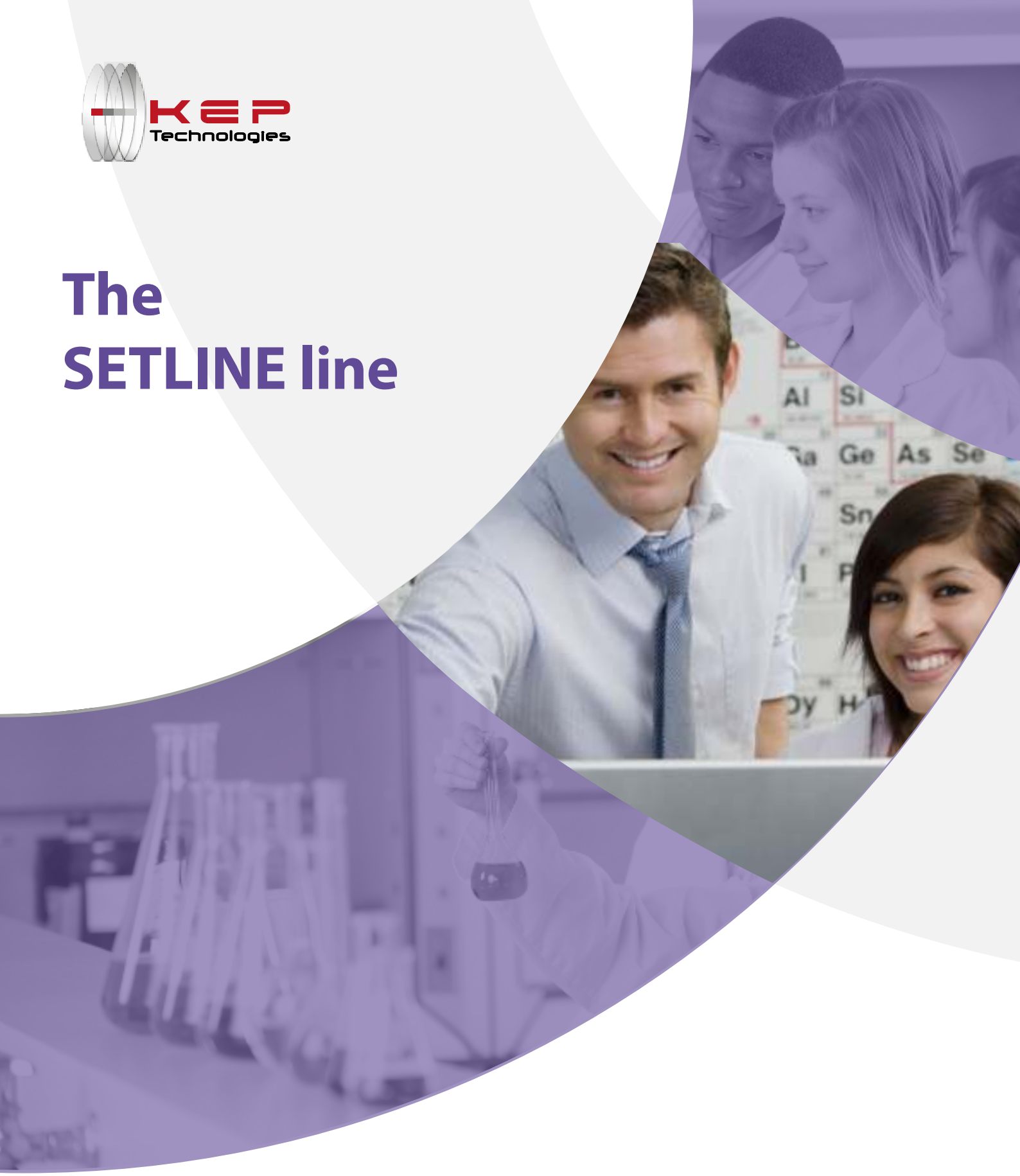

UNUSUALLY SIMPLE. SURPRISINGLY POWERFUL.

setaram
KEP TECHNOLOGIES

THERMAL ANALYSIS & APPLICATIONS

KEP Technologies is not simply an instrument company, but a full solution provider.
We do not claim that a single product is suited for all applications and have with our SETARAM brand developed a range of products with different characteristics to more closely meet your demands.
We are confident that with KEP Technologies you will find a dedicated Thermal Analysis solution with the performance you need to get the best understanding of your materials. This being the case no matter which of our below market segments you may work in.

ENERGY & ENVIRONMENT

Thermal stability and decomposition of fuels and other materials for energy & environment processes.

LIFE SCIENCES

Thermal stability of food components and of pharmaceuticals, purity, polymorphism, water content.

ORGANIC MATERIALS SCIENCE

Polymers compositional analysis, thermal stability, cristallinity, glass transition, melting, OIT (Oxidation Induction Time), Curing of thermosets.

PROCESS SAFETY

Thermal stability of reactants and products, of energetic materials.

INORGANIC MATERIALS SCIENCE

Composition analysis and thermal stability (minerals, nanomaterials, building materials), metals and alloys phase diagrams.

THE KEP TECHNOLOGIES ADVANTAGE

Each SETLINE Thermal Analyzer also embodies our "Reimagine Material Characterization" value proposition. It does so by delivering the three core customer benefits of Experimental Control, Instrument Versatility and Quality Results.

We know that solutions that provide these benefits will deliver the highest value to our customers.

In addition to our core customer benefits, we are able to provide customized solutions by harnessing the engineering and project management expertise of our highly skilled organization.

CUSTOMIZED SOLUTIONS

Modular design allows for upgraded and tailored functionality
Access to all previous non-proprietary custom requests
Open access to engineering development team

THE SETLINE LINE

Thermal Anaysis has applications in many academic and industrial fields including but not limited to Material Science, Metallurgy, Polymer and Physical Chemistry, Energy, Chemical Engineering, Geoscience, Pharmacy and Food Science. This diversity highlights the variety of institutes and companies who use thermal analysis instruments and often on a continual basis.
With educational and quality-control needs in mind, Setline® thermal analysis instruments are designed for simplicity and power.

Setline® is easy to use and easy to own

EASY TO USE
- **Setline® is easy to use accross diverse academic fields**
- **Setline's® compact design is robust and space efficient**
- **Options focussed around core needs ensure ease of use and quicker mastery**
- **Setline's® robots (DSC+ and STA+) automate sample handling across multiple experiments**

EASY TO OWN
- **Setline® is built for durability in high use situations**
- **Cost of ownership is lowered through simplified maintenance for minimum down time and a Replacement Parts Guarantee***
- **Setlines® Technical and Application support ensures fast, expert help on any question**

**See local guidelines for details*

SETLINE LINE THERMAL ANALYZERS

Our range of instruments for the characterization of materials across wide temperature ranges and using all common thermal analysis techniques.

-170°C to 700°C

2D

SETLINE DSC / DSC+

SETLINE STA / STA+

Ambient to 1 100°C

EXPERIMENTAL OPTIONS & VERSATILITY

SETLINE TGA

Ambient to 1 100°C

CALISTO - THERMAL ANALYSIS SOFTWARE

CALISTO 2.0 is the industry standard thermal analysis software developed for all Setaram instrumentation and applications. It's quick to install and comprises of two independent parts:

- **CALISTO ACQUISITION:** dedicated to the control and data acquisition of our thermal analysis systems.
- **CALISTO PROCESSING:** for the treatment of Thermal Analysis Data independent of instrument type.

CALISTO software includes over 100 customer-requested features and promises to be the most powerful, flexible and intuitive data treatment software in thermal analysis.

See calisto-software.com for more information on the power of Calisto 2.0 software.

DSC – DIFFERENTIAL SCANNING CALORIMETRY
Measures heatflow, heat and heat capacity

TGA – THERMOGRAVIMETRIC ANALYSIS
Measures mass loss and uptake, thermal stability, decompositions and solid-gas reactions

STA- SIMULTANEOUS THERMAL ANALYSIS
Combines TGA and DSC for more complete thermal characterization

SETLINE DSC / DSC+

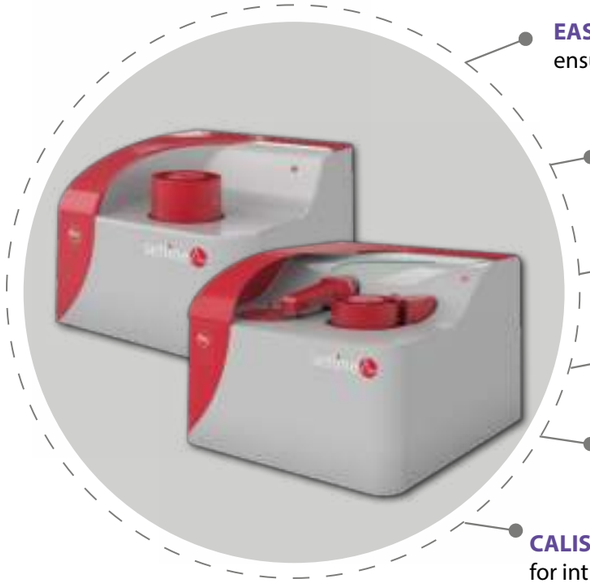

EASY TO USE WITH ROBUST SENSOR TECHNOLOGY
ensuring quality, consistent and reliable data

AVAILABLE WITH HIGH PRESSURE CRUCIBLES
up to 500 bar at 600°C

ACCESSIBLE INSTRUMENT & SENSOR
for easy, cost effective replacement

LOWER COST OF OWNERSHIP
through simplified maintenance and a Replacement Parts Guarantee

TECHNICAL & APPLICATION SUPPORT
for fast expert help with any questions

CALISTO 2.0 EXCLUSIVE SOFTWARE
for intuitive and powerful data handling

	SETLINE® DSC	SETLINE® DSC+
Temperature range (°C)	-170 to 700	-170** to 700
Programmable heating rate (°C/min)	0.01 to 100	0.01 to 100
Cooling time	12 min from 500°C to 100°C (air) 12 min from 25°C to -100°C (LN_2) 5 min from 100°C to 0°C (cryothermostat)	12 min from 500°C to 100°C (air) 12 min from 25°C to -100°C (LN_2) 5 min from 100°C to 0°C (cryothermostat)
Enthalpy accuracy / precision * (%)**	+/- 0.8 / 2.5	
Temperature accuracy / precision * (°C)**	+/- 0.30 / 0.50	
DSC measurement range (mW)	+/- 6 000	
Atmosphere	Inert gas, air (possible gas switch between 2 gases)	
Gas flow range (ml/min)	10 to 100	
Autosampler	-	59 positions (samples or references)
Heigh - Width - Depth (mm) / (in)	320 - 380 - 500 / 12.6 - 15 - 19.7	365 (825 open) - 455 - 510 / 14.4 (32.5 open) -17.9 - 20
Power requirements	230V - 50/60Hz	

**Lower temperatures can be achieved. The time to reach these minimum temperatures can be over two hours;*
***When subambient cooling devices are used, the autosampler cannot operate; ***Based on indium melting tests*

We provide regular and High Pressure crucibles.
- Alumina and aluminum (30 and 100 µl) crucibles for good thermal transfer
- High pressure crucibles in Stainless steel and Gold plated (30 µl) up to 200 bar and 400 °C while being inert to most samples.
- (Setline DSC only) High pressure crucibles (30 µl) in Incoloy up to 500 bar and 600 °C for unmatched pressure capability.

The Setline transducer is made from chromel-constantan and uses plate-shaped DSC rod technology ensuring high sensitivity over the full temperature range.
It is housed in a small volume furnace. It enables high heating and cooling rates for laboratories searching for high throughput solutions. Its temperature is extremely uniform, ensuring high quality data and accurate sample temperature measurement of thermal events.

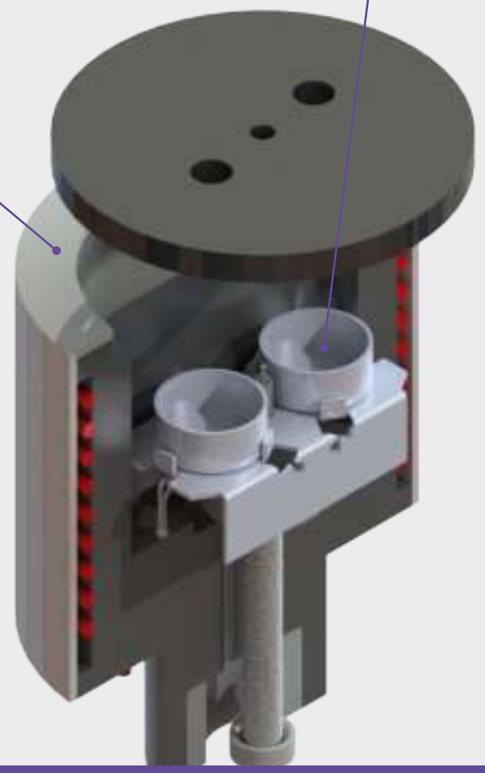

Three types of sub ambient cooling options are available:
- Cryothermostat device for operations**:
. from -60 °C* to 200 °C under a flow of He
. from -50 °C to 400 °C under a flow of Ar, N2 or dry air
- Liquid nitrogen (LN2) automated accessory for operations from -150 to 400 °C**
- (Setline DSC only) LN2 manual accessory for operations from -170 to 400 °C

Cross section of the SETLINE DSC / DSC+ furnace

SETLINE STA / STA+

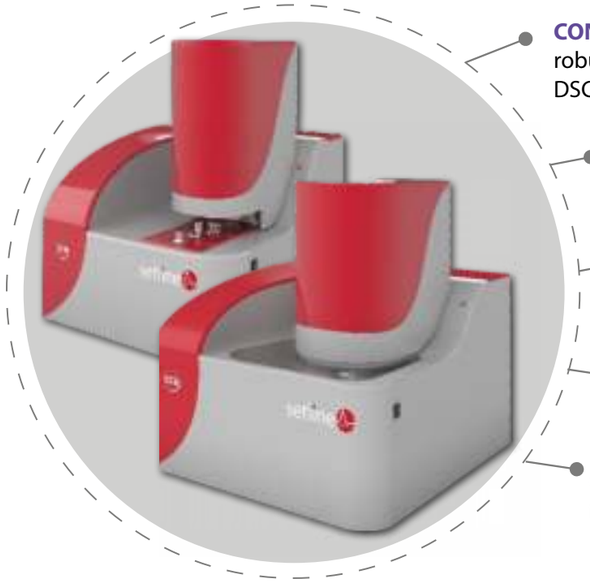

CONVENIENTLY DESIGNED
robust balance and DSC sensor technology with an easy DSC sensor access and replacement

ACCESSIBLE INSTRUMENT & SENSOR
for easy, cost effective replacement

LOWER COST OF OWNERSHIP
through simplified maintenance and a Replacement Parts Guarantee

TECHNICAL & APPLICATION SUPPORT
for fast expert help with any questions

CALISTO 2.0 EXCLUSIVE SOFTWARE
for intuitive and powerful data handling

	SETLINE® STA	SETLINE® STA+
Temperature range (°C)	RT* to 1 100	
Programmable heating rate (°C/min)	0.01 to 50	
Cooling time	45 min from 1 100 °C to 70 °C (air)	
Atmosphere	Inert (N_2, Ar, He**…) or oxidative (Air, O_2…)	
Gas flow range (ml/min)	10 to 100	
Mass variation range (mg)	+/- 200 ; +/- 1 000	
Mass variation resolution (µg)	0.05 ; 0.5	
DSC rod resolution (µW)	2.5	
Autosampler	-	49 positions (samples or references)
Maximum dimensions Height - Width - Depth (mm) / (in)	600 (closed) or 800 (open) - 400 - 500 / 23.6 (closed) or 31.5 (open) - 15.7 - 19.7	800 - 500 - 650 / 31.5 - 19.7 - 25.6
Power requirements	230V - 50/60Hz	

**Room Temperature*
*** The maximum experimental temperature is 900°C under helium*

We provide the finest quality aluminum, alumina and platinum crucibles (80, 90 and 100 µl respectively)

The DSC sensor of the Setline STA / STA+ is made from platinum alloys and uses plate-shaped DSC rod technology ensuring high sensitivity over the full temperature range.

The balance used to measure sample mass variations is based on the proven technique of a beam articulated around a torsion band, the most appropriate design for a stable and robust system. It guarantees reliable and sensitive measurements.

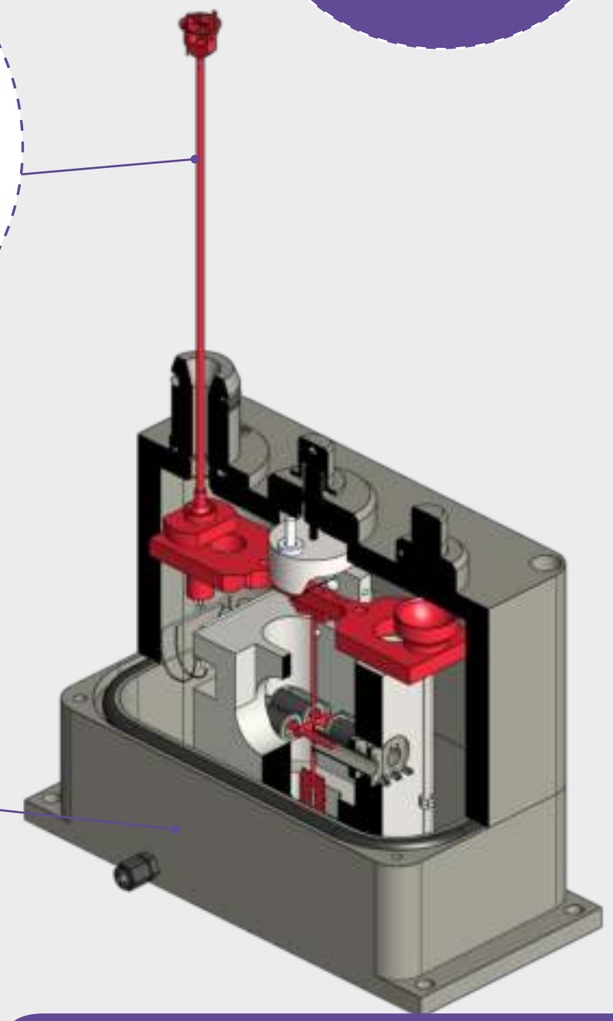

Cross section of the SETLINE STA / STA+ balance

SETLINE TGA

ACCURACY MADE ACCESSIBLE
with a simple and reliable hang-down balance, specially designed for TGA applications

LOWER COST OF OWNERSHIP
through simplified maintenance and a Replacement Parts Guarantee

TECHNICAL & APPLICATION SUPPORT
for fast expert help with any questions

CALISTO 2.0 EXCLUSIVE SOFTWARE
for intuitive and powerful data handling

	SETLINE® TGA
Temperature range (°C)	RT* to 1 100
Programmable heating rate (°C/min)	0.01 to 50
Temperature accuracy (°C)	+/- 1
Temperature precision (°C)	+/- 0.3
Cooling time	45 min from 1 100 °C to 70 °C (air)
Atmosphere	Inert (N2, Ar, He**…) or oxidative (Air, O2…)
Gas Flow Range (ml/min)	10 to 100
Mass Variation range (mg)	+/- 20 / +/- 200
Weighing accuracy (%)	0.03***
Weighing precision (%)	0.03***
Mass variation resolution (µg)	0.0023 (small range)
Baseline drift (µg)	<50****
Baseline repeatability (µg)	+/-5****
Maximum dimension Heigh - Width - Depth (mm) / (in)	650 (850) – 400 – 500 / 25.6 (33.5) – 15.7 – 19.7
Power requirements	230V - 50/60Hz

**Room Temperature*
*** The maximum experimental temperature is 900°C under helium*
**** 5 measurements using a 20mg certified reference material*
***** Under helium up to 900 °C*

In the hang-down balance principle, the sample is hung from the weighing module using thin suspensions.
As well as being highly stable, these balances minimize the drift of the mass variation signal with temperature, which is also known as buoyancy effect.

SETLINE TGA is based on a robust furnace, also used by SETLINE STA.

A metal resistor heats up the sample to the set point, while a water-cooling circuit is used both for a smooth temperature control and to keep the furnace's outside temperature within safe limits.

The furnace can be programmed to operate at a set heating rate or temperature.

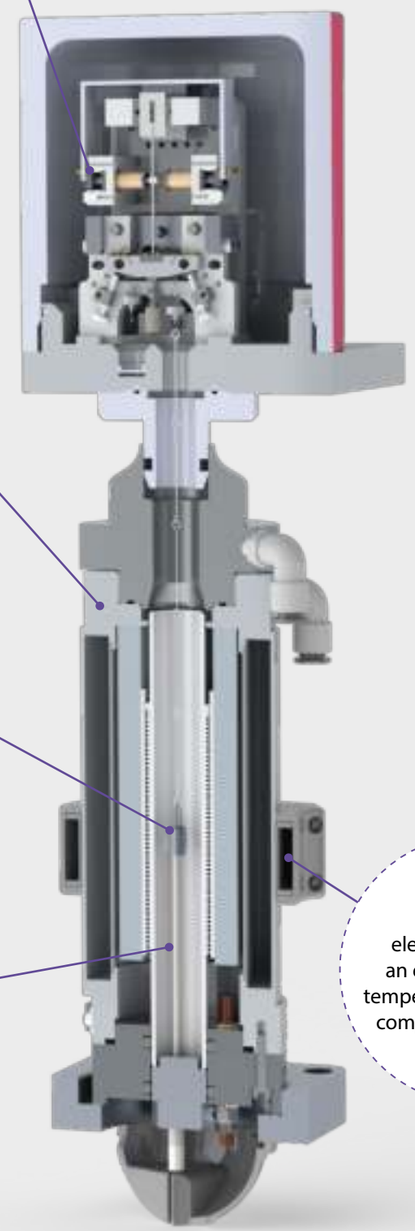

We provide the finest quality aluminum, alumina or platinum crucibles for hang-down balances. Their volumes range between 130 and 250 µL.

Temperature control is made possible by a thermocouple placed at the bottom of the furnace.

It integrates a built-in electromagnet for an easier-than-ever temperature calibration, compliant with ASTM E1582.

Schematics of SETLINE TGA

Switzerland – France – China – United States – India – Hong Kong
For contact details: **www.setaramsolutions.com** or **setaram@kep-technologies.com**